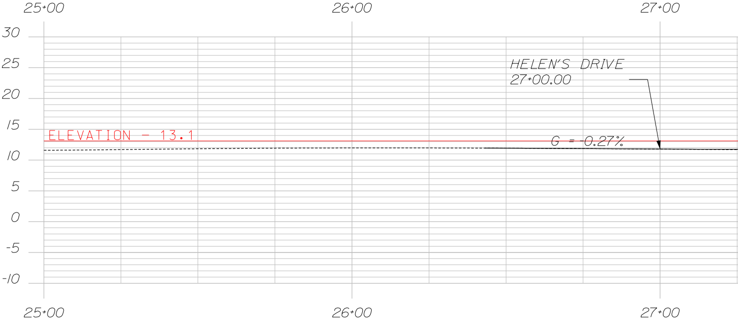
25+00
26+00
27+00
30
25
20
15
10
5
0
-5
-10
HELEN'S DRIVE
27+00.00
ELEVATION - 13.1
G = -0.27%
25+00
26+00
27+00

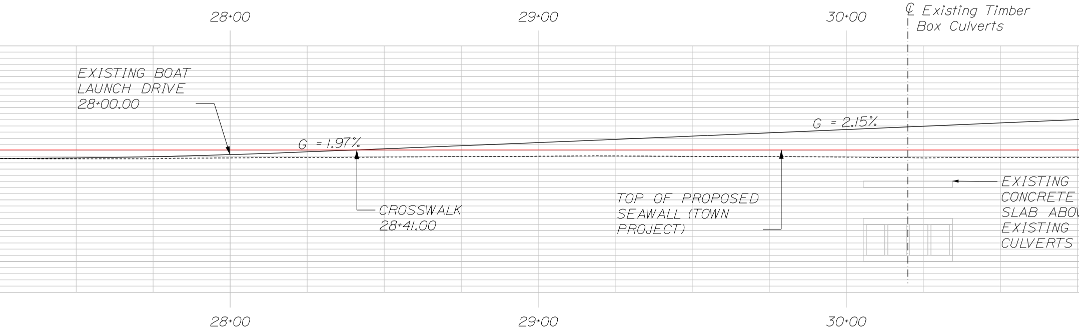
28+00
29+00
30+00
℄ Existing Timber Box Culverts
EXISTING BOAT LAUNCH DRIVE 28+00.00
G = 1.97%
G = 2.15%
CROSSWALK 28+41.00
TOP OF PROPOSED SEAWALL (TOWN PROJECT)
EXISTING CONCRETE SLAB ABO
EXISTING CULVERTS
28+00
29+00
30+00

CONCEP

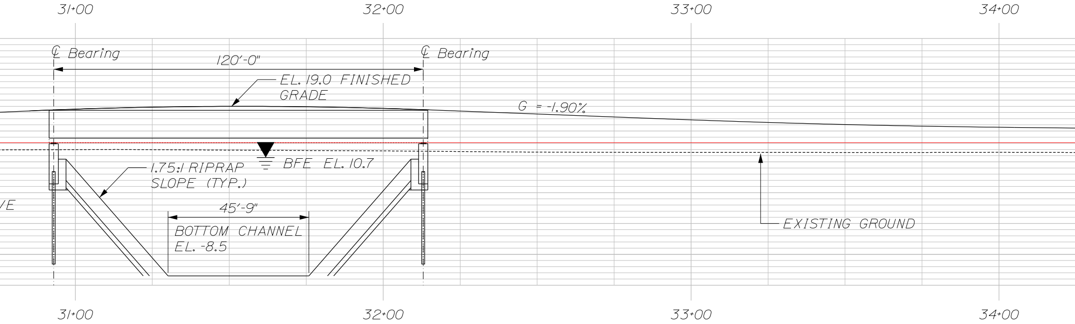
31+00
32+00
33+00
34+00
℄ Bearing
℄ Bearing
120'-0"
EL. 19.0 FINISHED GRADE
G = -1.90%
BFE EL. 10.7
1.75:1 RIPRAP SLOPE (TYP.)
VE
45'-9"
BOTTOM CHANNEL EL. -8.5
EXISTING GROUND
31+00
32+00
33+00
34+00

TUAL MAXIMUM SEA LEVEL RISE BRIDGE PROFILE

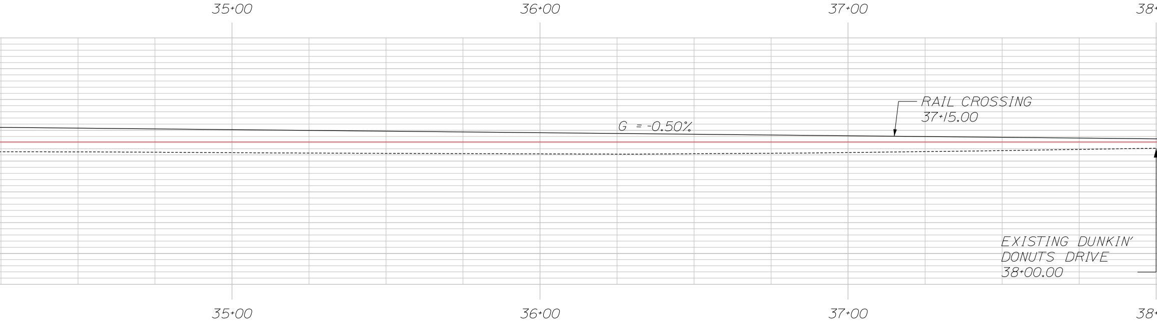
35+00
36+00
37+00
38+
RAIL CROSSING
37+15.00
G = -0.50%
EXISTING DUNKIN'
DONUTS DRIVE
38+00.00
35+00
36+00
37+00
38+

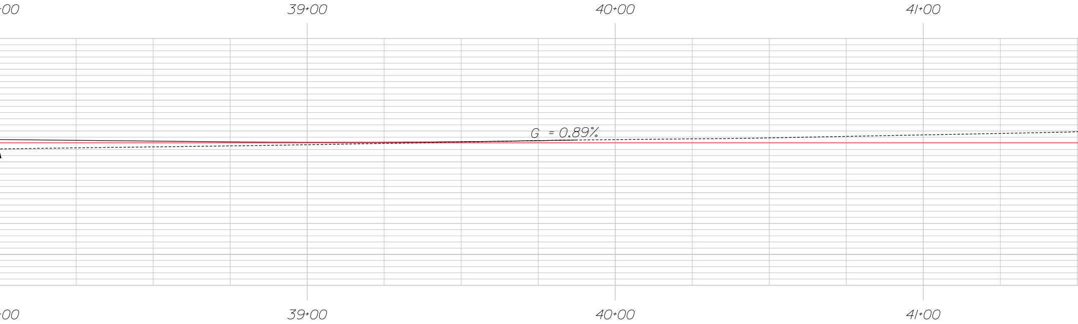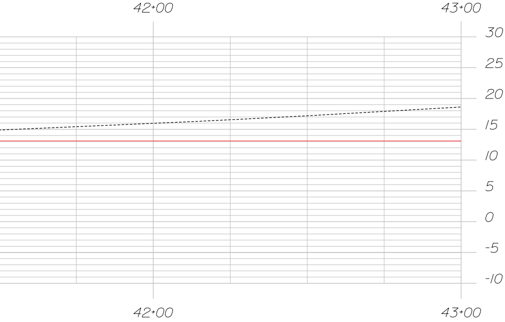
+00
39+00
40+00
41+00
G = 0.89%
+00
39+00
40+00
41+00